REVISIONS				
ZONE	REV	DESCRIPTION	DATE	APPROVED

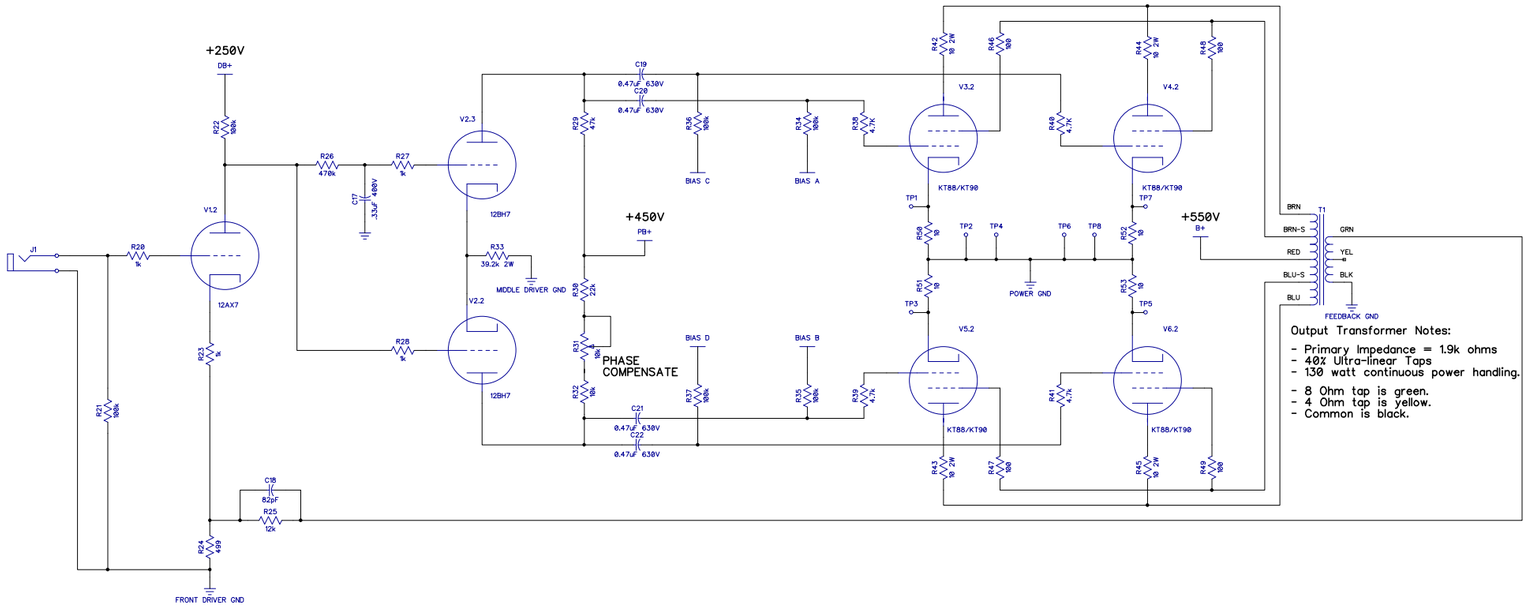

Output Transformer Notes:

- Primary Impedance = 1.9k ohms
- 40% Ultra-linear Taps
- 130 watt continuous power handling.
- 8 Ohm tap is green.
- 4 Ohm tap is yellow.
- Common is black.

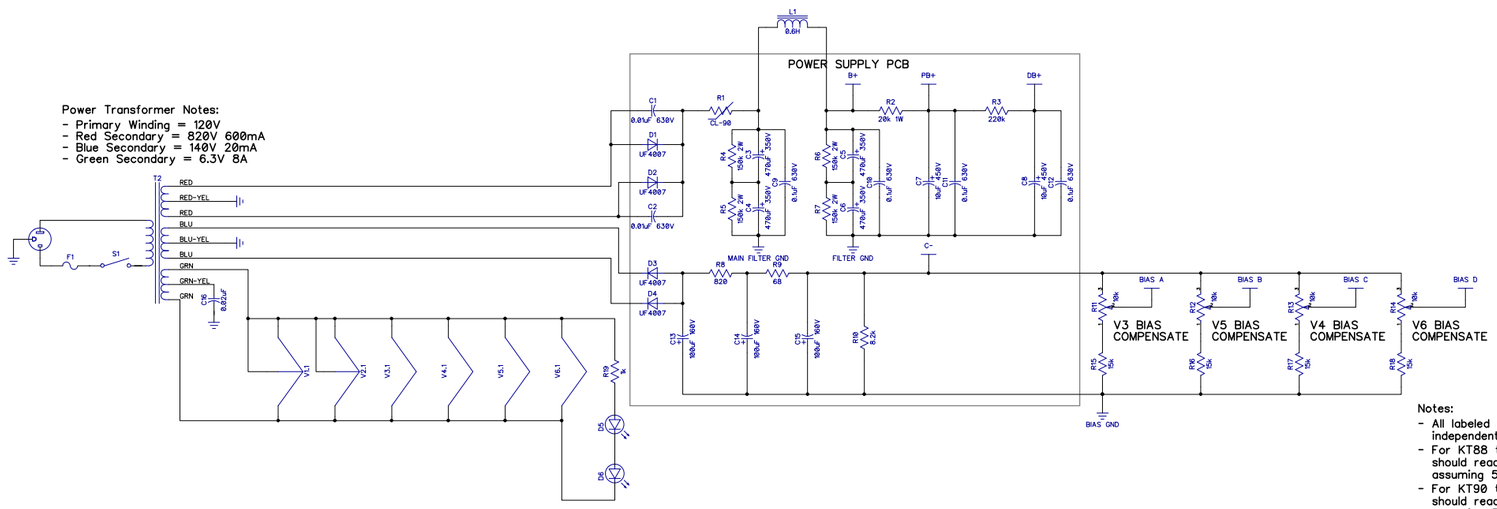

Power Transformer Notes:

- Primary Winding = 120V
- Red Secondary = 820V 600mA
- Blue Secondary = 140V 20mA
- Green Secondary = 6.3V 8A

Notes:

- All labeled ground nodes connect independently to the main star point.
- For KT88 tubes, each bias test point should read 0.55 volts after full warm up assuming 550 volts B+.
- For KT90 tubes, each bias test point should read 0.064 volts after full warm up. assuming 550 volts B+.
- Phase compensator is adjusted until amplitude readings off phase inverter are equal in height.

SIZE	FSCM NO.	DWG NO.	REV
SCALE		Driver Stage	